Lab 8

Commented [1]: Quiz 3

In the physical configuration, everything is the same as the Cisco packet tracer topology. The only difference is that the firewalls were disabled on the PCs in the physical setup due to it blocking packets, causing the ping commands to fail.

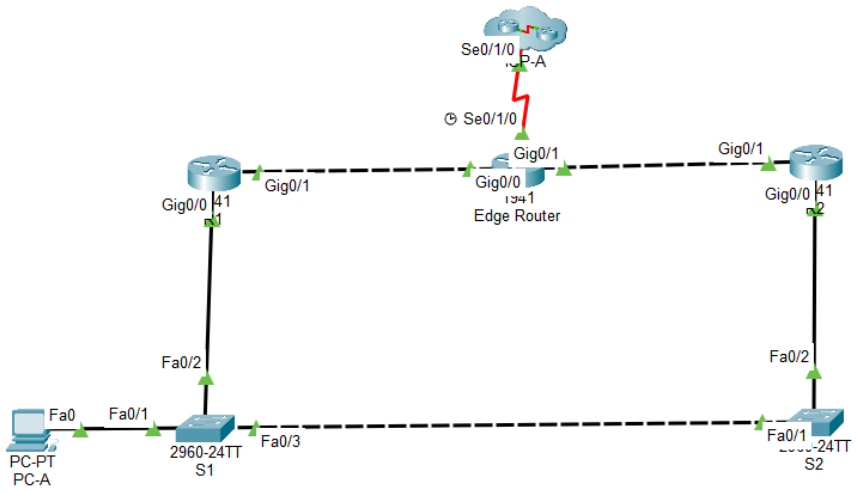

Configuration:

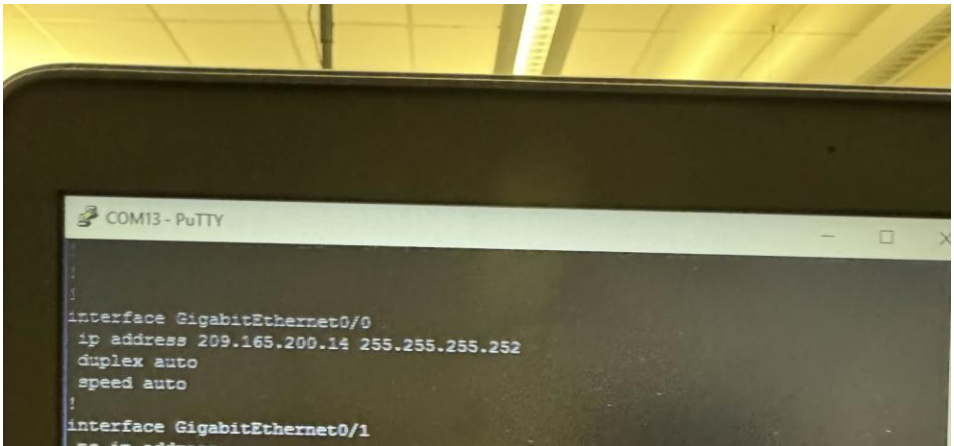
COM13 - PuTTY
interface GigabitEthernet0/0
ip address 209.165.200.14 255.255.255.252
duplex auto
speed auto
!
interface GigabitEthernet0/1

COM13 - PuTTY

```
redundancy
!
!
!
!
!
!
interface GigabitEthernet0/0
 ip address 192.168.2.2 255.255.255.0
 duplex auto
 speed auto
!
interface GigabitEthernet0/1
 ip address 192.168.3.2 255.255.255.0
 duplex auto
 speed auto
!
interface FastEthernet0/2/0
 no ip address
 shutdown
 duplex auto
 speed auto
!
interface FastEthernet0/2/1
 ip address 209.165.200.13 255.255.255.252
 duplex auto
 speed auto
!
router ospf 1
 log-adjacency-changes
 network 192.168.2.0 0.0.0.255 area 0
 network 192.168.3.0 0.0.0.255 area 0
!
ip forward-protocol nd
!
no ip http server
no ip http secure-server
!
ip route 0.0.0.0 0.0.0.0 209.165.200.14
!
!
 --More--
```

```
!
!
!
!
!
!
!
!
!
!
interface GigabitEthernet0/0/0
 ip address 192.168.1.3 255.255.255.0
 standby 1 ip 192.168.1.1
 standby 1 preempt
 negotiation auto
!
interface GigabitEthernet0/0/1
 ip address 192.168.3.1 255.255.255.0
 negotiation auto
!
interface GigabitEthernet0
 vrf forwarding Mgmt-intf
 no ip address
 negotiation auto
!
router ospf 1
 network 192.168.1.0 0.0.0.255 area 0
 network 192.168.3.0 0.0.0.255 area 0
!
no ip http server
ip http secure-server
ip forward-protocol nd
ip route 0.0.0.0 0.0.0.0 192.168.3.2
!
!
!
!
!
```

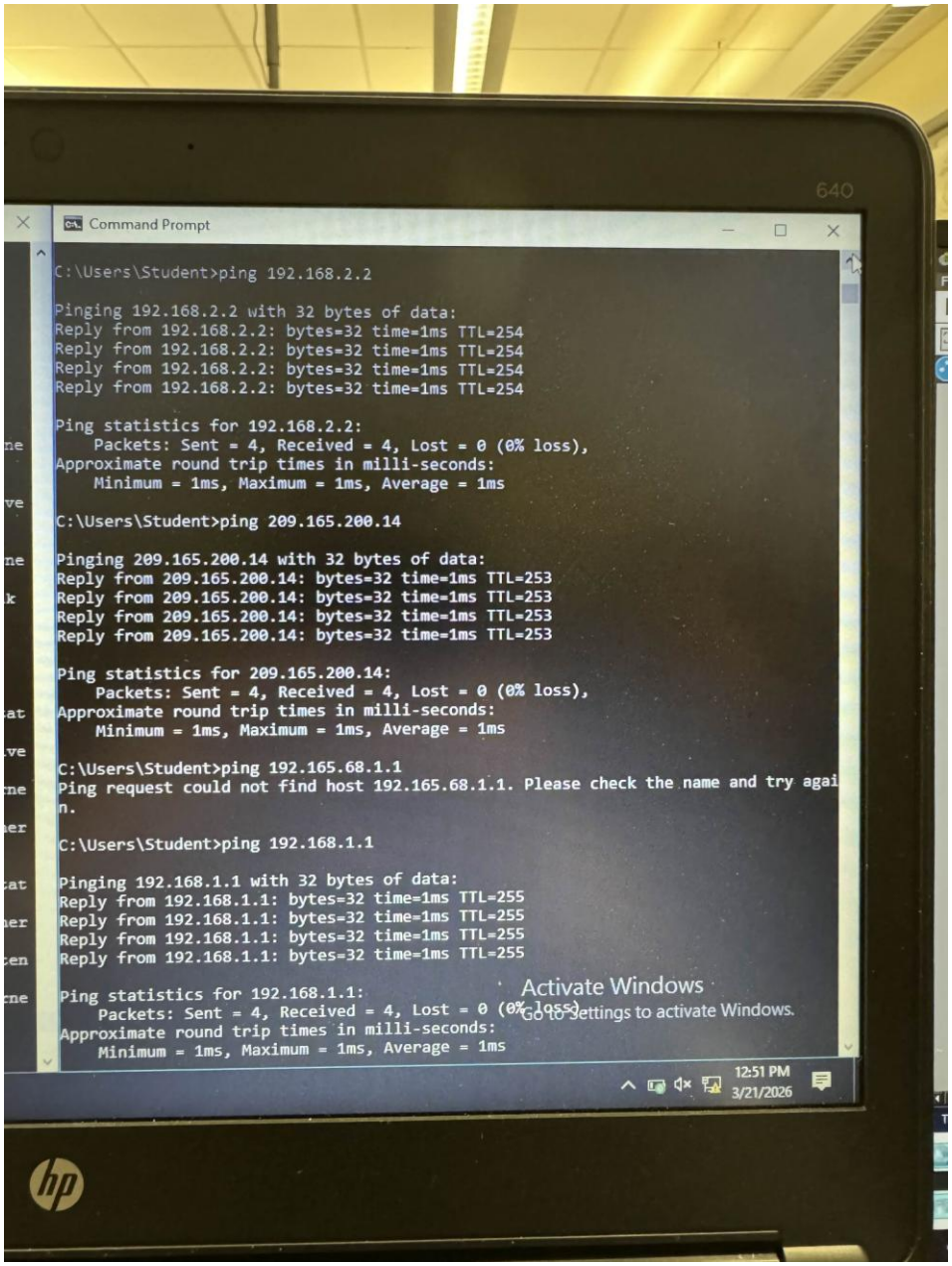
Command Prompt
C:\Users\Student>ping 192.168.2.2
Pinging 192.168.2.2 with 32 bytes of data:
Reply from 192.168.2.2: bytes=32 time=1ms TTL=254
Reply from 192.168.2.2: bytes=32 time=1ms TTL=254
Reply from 192.168.2.2: bytes=32 time=1ms TTL=254
Reply from 192.168.2.2: bytes=32 time=1ms TTL=254
Ping statistics for 192.168.2.2:
Packets: Sent = 4, Received = 4, Lost = 0 (0% loss),
Approximate round trip times in milli-seconds:
Minimum = 1ms, Maximum = 1ms, Average = 1ms
C:\Users\Student>ping 209.165.200.14
Pinging 209.165.200.14 with 32 bytes of data:
Reply from 209.165.200.14: bytes=32 time=1ms TTL=253
Reply from 209.165.200.14: bytes=32 time=1ms TTL=253
Reply from 209.165.200.14: bytes=32 time=1ms TTL=253
Reply from 209.165.200.14: bytes=32 time=1ms TTL=253
Ping statistics for 209.165.200.14:
Packets: Sent = 4, Received = 4, Lost = 0 (0% loss),
Approximate round trip times in milli-seconds:
Minimum = 1ms, Maximum = 1ms, Average = 1ms
C:\Users\Student>ping 192.165.68.1.1
Ping request could not find host 192.165.68.1.1. Please check the name and try agai
n.
C:\Users\Student>ping 192.168.1.1
Pinging 192.168.1.1 with 32 bytes of data:
Reply from 192.168.1.1: bytes=32 time=1ms TTL=255
Reply from 192.168.1.1: bytes=32 time=1ms TTL=255
Reply from 192.168.1.1: bytes=32 time=1ms TTL=255
Reply from 192.168.1.1: bytes=32 time=1ms TTL=255
Ping statistics for 192.168.1.1:
Packets: Sent = 4, Received = 4, Lost = 0 (0% loss),
Approximate round trip times in milli-seconds:
Minimum = 1ms, Maximum = 1ms, Average = 1ms
Activate Windows
Go to Settings to activate Windows.
12:51 PM
3/21/2026

COM13 - PuTTY

```
R1#
*Mar 27 00:43:14.730: %LINK-3-UPDOWN: Interface GigabitEthernet0/0/0
R2#show standby brief
*Mar 27 00:52:29.176: %HSRP-5-STATECHANGE: GigabitEthernet0/0/0 Grp 1 stateen
R2#show standby brief
                     P indicates configured to preempt.
                     |
Interface   Grp  Pri P State   Active          Standby         Virtual IP
Gi0/0/0     1    100 P Active  local           unknown         192.168.1.1
R2#
*Mar 27 00:52:55.495: %OSPF-5-ADJCHG: Process 1, Nbr 192.168.2.1 on GigabitEtherne
t0/0/0 from FULL to DOWN, Neighbor Down: Dead timer expired
R2#sh
*Mar 27 00:54:29.342: %HSRP-5-STATECHANGE: GigabitEthernet0/0/0 Grp 1 state Active
 -> Spe
R2#
*Mar 27 00:54:38.567: %OSPF-5-ADJCHG: Process 1, Nbr 192.168.2.1 on GigabitEtherne
t0/0/0 from LOADING to FULL, Loading Done
*Mar 27 00:54:40.050: %HSRP-5-STATECHANGE: GigabitEthernet0/0/0 Grp 1 state Speak
-> Standby
R2#traceroute
Protocol [ip]:
R1>en
R1#
*Mar 27 00:55:34.811: %LINK-3-UPDOWN: Interface GigabitEthernet0/0/0, changed stat
e to down
*Mar 27 00:55:34.817: %HSRP-5-STATECHANGE: GigabitEthernet0/0/0 Grp 1 state Active
 -> Init
*Mar 27 00:55:34.820: %OSPF-5-ADJCHG: Process 1, Nbr 192.168.3.1 on GigabitEtherne
t0/0/0 from FULL to DOWN, Neighbor Down: Interface down or detached
*Mar 27 00:55:35.811: %LINEPROTO-5-UPDOWN: Line protocol on Interface GigabitEther
net0/0/0, changed state to down
R1#
*Mar 27 00:56:00.815: %LINK-3-UPDOWN: Interface GigabitEthernet0/0/0, changed stat
e to up
*Mar 27 00:56:01.815: %LINEPROTO-5-UPDOWN: Line protocol on Interface GigabitEther
net0/0/0, changed state to up
*Mar 27 00:56:02.945: %HSRP-5-STATECHANGE: GigabitEthernet0/0/0 Grp 1 state Listen
 -> Active
*Mar 27 00:56:06.718: %OSPF-5-ADJCHG: Process 1, Nbr 192.168.3.1 on GigabitEtherne
t0/0/0 from LOADING to FULL, Loading Done
R1#show run
Building configuration...
```